VSR

DUSTEX® Fog Blower

The mobile solution for dust suppression

DUSTEX® Fog Blower

… the mobile solution for dust suppression

Since 1985, the DUSTEX® dispersion– and water spraying systems are approved solutions for dust suppression at fixed points. With this know-how, we have developed our mobile solution for reduction of dust emissions, the DUSTEX® Fog Blower.

The DUSTEX® Fog Blower is primarily designed for the application in closed or half-opened halls where dust emissions have to be reduced in larger areas.

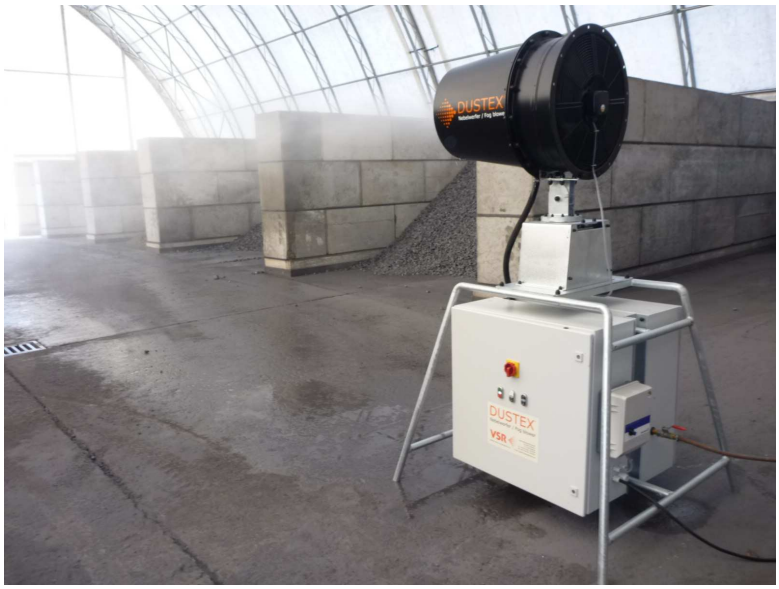

The DUSTEX® Fog Blower is equipped with a cabinet for controls and instruments. The pump installed inside this valve cabinet increases the water pressure up to 16 bar. The water flow can easily be adjusted manually by a flow meter with needle valve.

The applied nozzles create a droplet spectrum of about 9 µm to 60 µm at a working pressure of 16 bar. Thus they are best suited to bind very fine dust particles as well as bigger ones.

The DUSTEX® Fog blower is equipped with a slew drive. The turning angle can be adjusted up to 320°.

Available options:

- Remote control
- Electrical drive to adjust the spray angle of the fan
- Mobile base frame
- UV Lamp for disinfection of the water

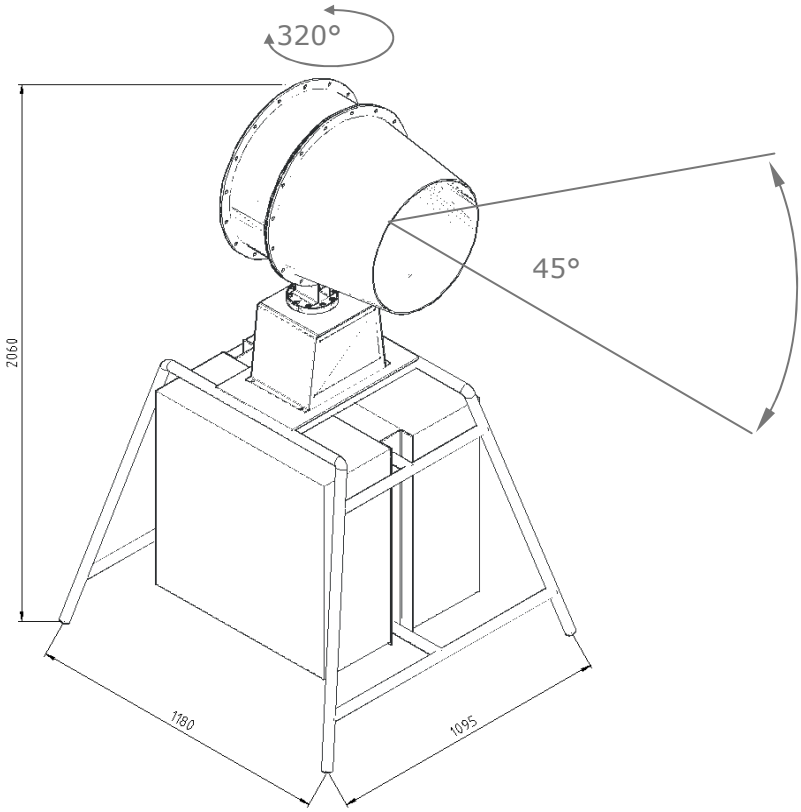

Technical Data:

Voltage:	400 V AC	Needed water pressure:	1-3 bar
Frequency:	50 Hz		
		Water consumption:	
Power Fan:	1 kW	25 l/h -1000 l/h	
Power Pump:	0,75 kW	depending on configuration of the machine.	
Turning angle:	0° - 320°		
		Throwing range:	12 m to 20 m
Pitch:	0° - 45°	Total weight:	220 kg

Delivery variants:

- With hot-dip galvanized steel frame for free positioning
- For mounting on steel beams (upright or overhead)
- Mobile base frame (with wheels)

Product programme

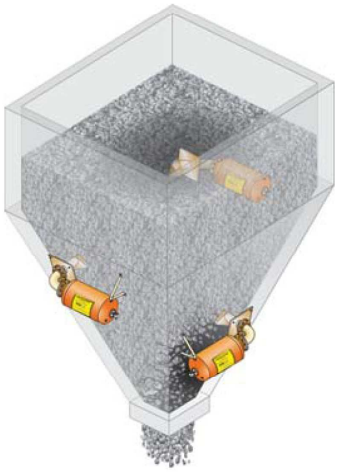

VSR BLASTER® Air cannons and air injectors

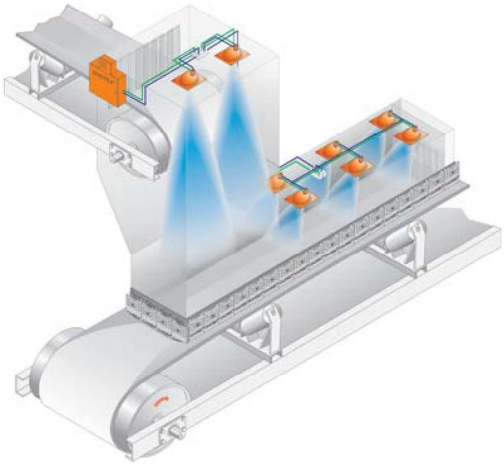

DUSTEX® Dust suppression system

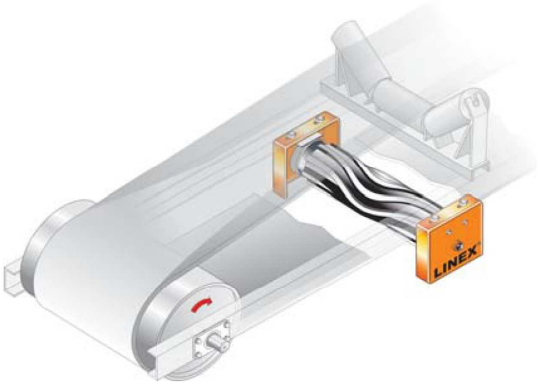

LINEX® Conveyor belt centralizing idler

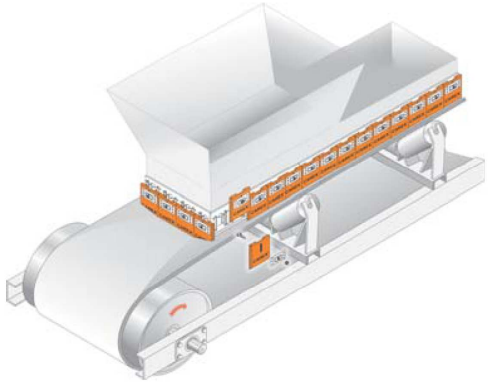

CAREX® sealing of conveyor belt transfers

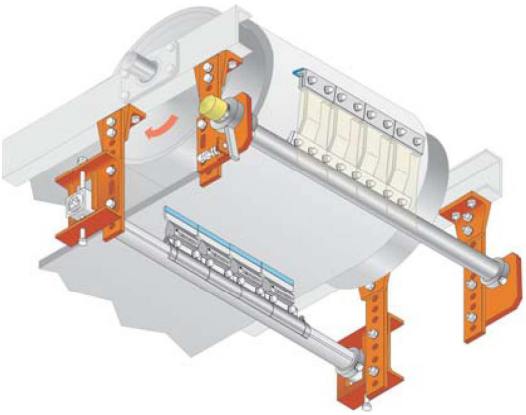

VIBREX® Conveyor belt cleaning

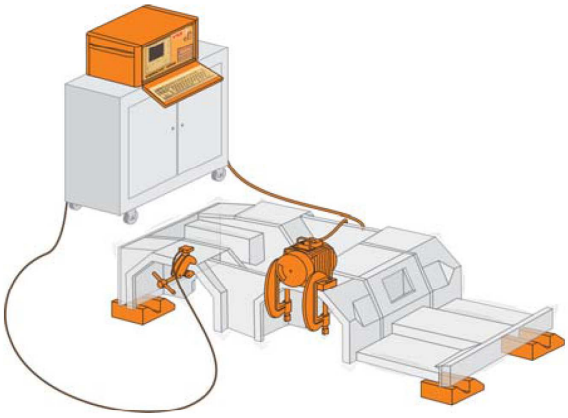

VIBMATIC 6000® Vibration stress reduction

VSR Industrietechnik GmbH
Am Alten Schacht 6
D- 47198 Duisburg
Tel. +49 (0) 20 66 / 99 66-30
Fax +49 (0) 20 66 / 99 66-62

Internet: www.vsr-industrietechnik.de
E-mail: info@vsr-industrietechnik.de

© VSR Industrietechnik GmbH 1/2010
Technical modifications reserved